Western Products, PO Box 245038, Milwaukee, WI 53224-9538 • www.westernplows.com

January 1, 2021
Lit. No. 43578, Rev. 03

85101
Spreader Components
WB-100B Walk-Behind Broadcast Spreader
Parts List

This Parts List is for WESTERN® WB-100B walk-behind broadcast spreaders with serial numbers 0000 and higher.

A DIVISION OF DOUGLAS DYNAMICS, LLC

HOPPER COMPONENTS

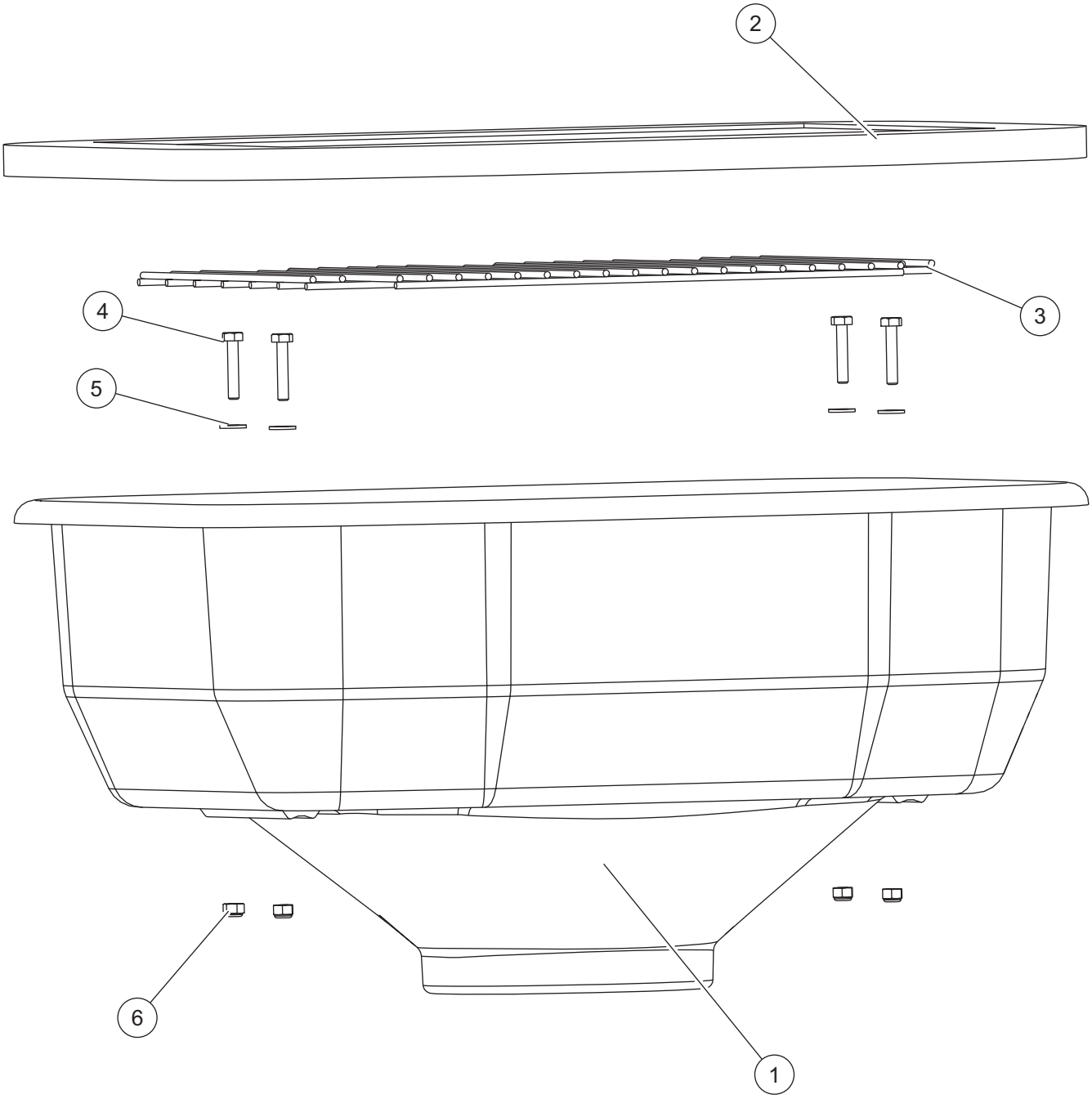

Hopper Components							
Item	**Part**	**Qty**	**Description**	**Item**	**Part**	**Qty**	**Description**
1	50975	1	Hopper, WB-100B Red	4	50911	4	1/4-20 x 1-3/8 Hex Cap Screw SS
2	50959	1	Hopper Cover, WB-100B	5	50969	4	1/4 Flat Washer SS
3	50961	1	Top Screen, WB-100B	6	50970	4	1/4-20 Hex Locknut Waxed SS
SS = Stainless Steel							

MAIN FRAME ASSEMBLY

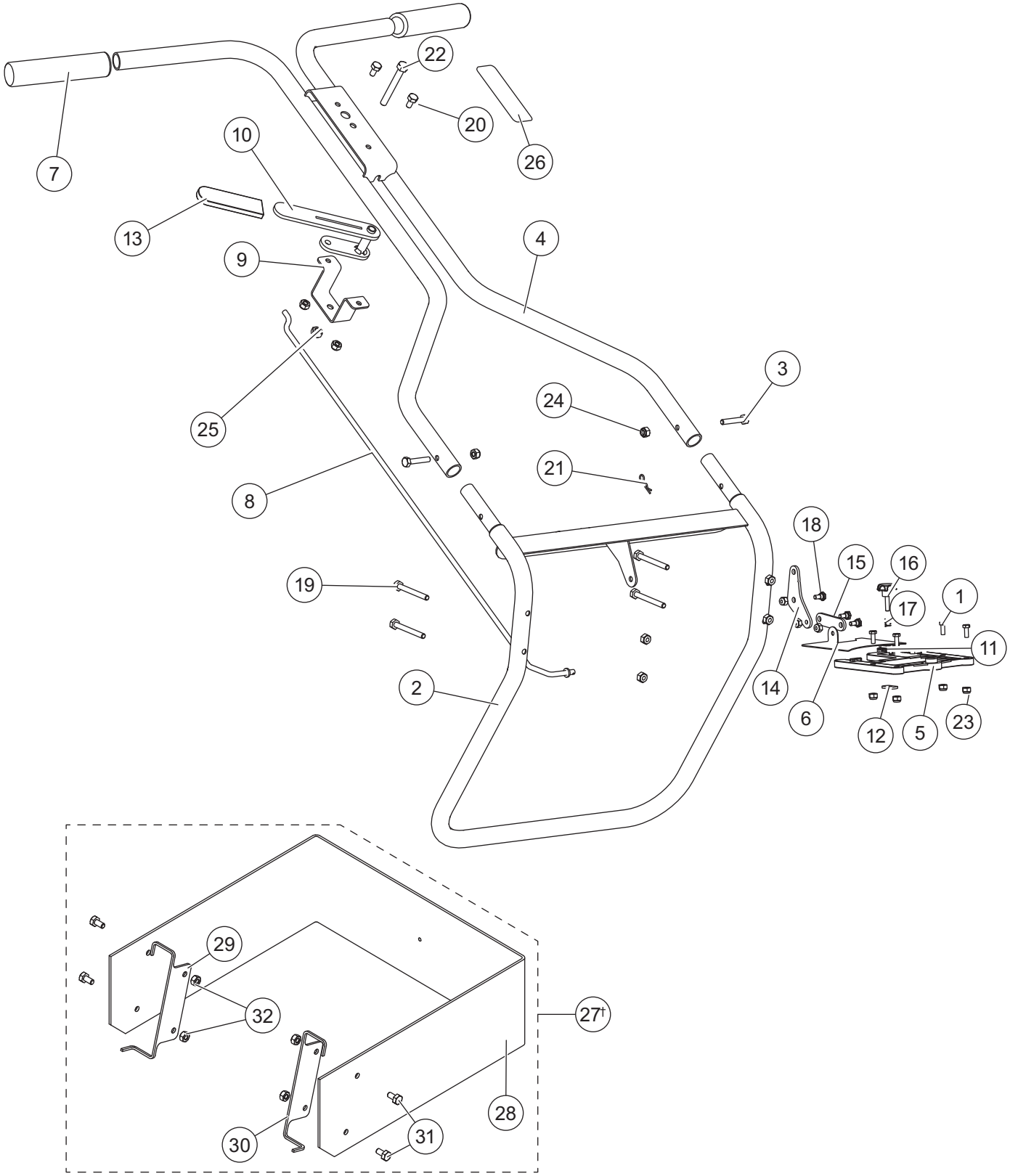

Main Frame Assembly							
Item	**Part**	**Qty**	**Description**	**Item**	**Part**	**Qty**	**Description**
1	50908	4	#10-32 x 5/8 Hex Cap Screw SS	15	50942	1	Gate Link
2	50909	1	Frame Stand	16	50943	1	Knob WB-100B
3	50911	2	1/4-20 x 1-3/8 Hex Cap Screw SS	17	50944	1	0.279 x 0.030 x 0.355 Spring SS
4	50912	1	Push Spreader Handle	18	50945	3	Pivot Bolt SS
5	50913	1	Gate Track	19	50948	4	1/4-20 x 2-1/4 Hex Cap Screw SS
6	50914	1	Gate Slide WB-100B	20	50949	2	1/4-20 x 1/2 Hex Cap Screw SS
7	50917	2	Handle Grip	21	50953	1	0.0585 x 1-1/8 Hairpin Cotter SS
8	50918	1	Gate Actuator Rod	22	50956	1	5/16-18 x 2-1/2 Hex Cap Screw SS
9	50936	1	Gate Handle Bracket	23	50958	7	#10-32 Locknut, Waxed SS
10	50937	1	Gate Handle	24	50970	8	1/4-20 Hex Locknut, Waxed SS
11	50938	1	Gate Adjustment Stop	25	50971	1	5/16-18 Hex Locknut, Waxed SS
12	50939	1	#10-32 Weld Nut	26	50972	1	Label, Open/Close
13	50940	1	Handle Cover	27†	50978	1	Poly Deflector Kit
14	50941	1	Gate Cam	ns	69813	1	Label, Serial Number
Item 27†			**50978 Poly Deflector Kit**				
28		1	Deflector	31		4	1/4-20 x 1/2 Button Head Cap Screw SS
29		1	Left-Hand Hanger	32		4	1/4-20 Serrated Flange Nut
30		1	Right-Hand Hanger				
			ns = not shown				SS = Stainless Steel

† Accessory only.

AXLE ASSEMBLY

Items 14–22 (shaded) are included in the 88261 Gear Kit.

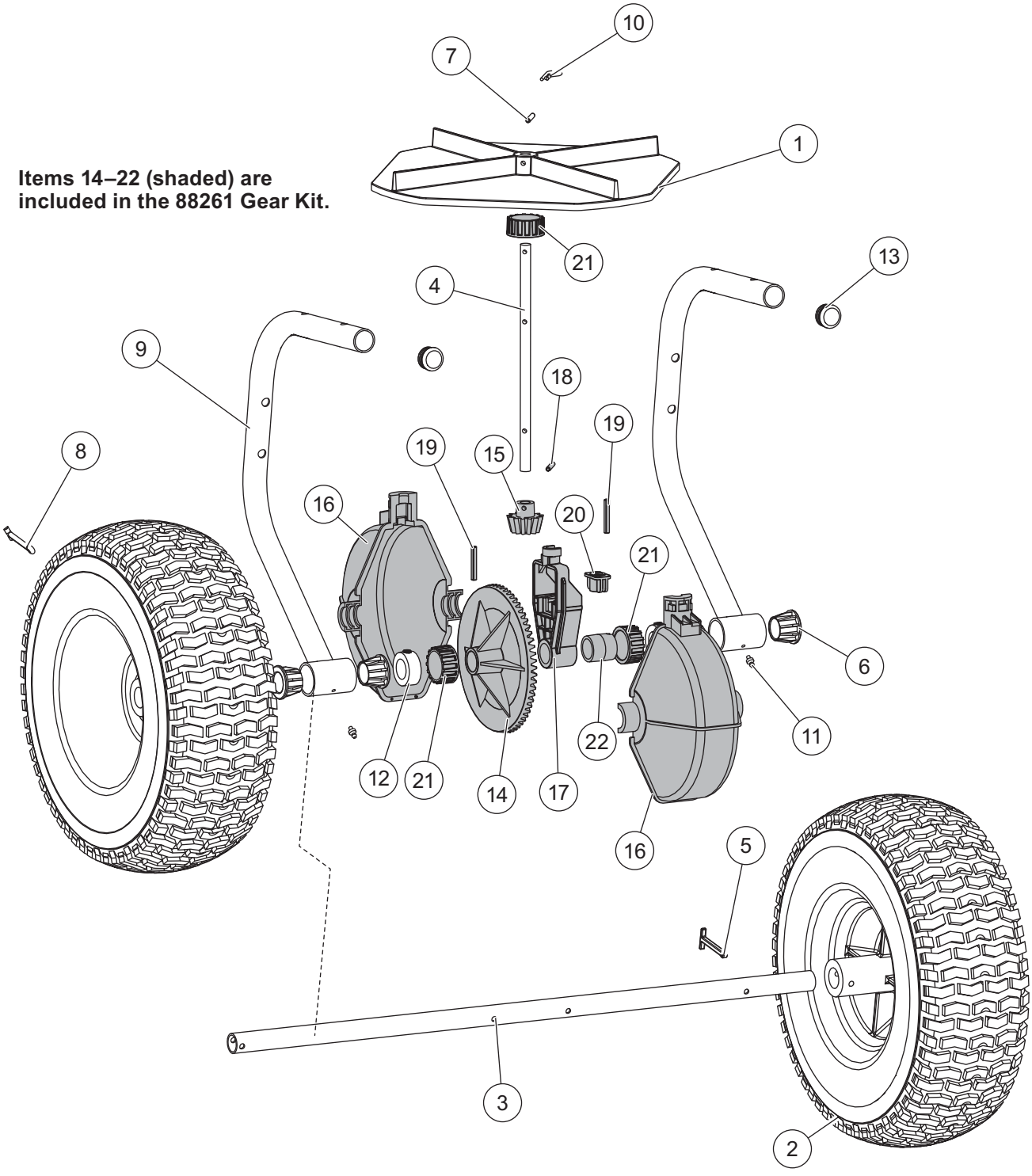

Axle Assembly							
Item	**Part**	**Qty**	**Description**	**Item**	**Part**	**Qty**	**Description**
1	88271	1	12" Spinner, Poly	8	50957	1	3/16 x 1-1/2 Cotter Pin SS
2	D5971	2	13 x 5 Wheel	9	50962	2	Hopper Frame Leg
3	50915	1	3/4 x 24.3 Axle	10	50963	1	Stir Wire
4	50916	1	3/8 x 8-1/2 Spinner Shaft	11	50964	2	Grease Fitting Straight
5	50933	1	3/16 x 2 Cotter Pin SS	12	50965	2	Shaft Collar
6	50935	4	Wheel Bushing Nylon	13	50966	2	Tube Cap
7	50947	1	5/32 x 1 Spring Pin	ns	88261	1	Gear Kit
88261 Gear Kit							
14		1	5-1/2 Bevel Gear	19		2	3/16 x 1-1/4 Spring Pin
15		1	1-1/2 Bevel Gear	20		1	Spinner Shaft Support
16		2	Gear Cover	21		3	Lock Ring
17		1	Gear Support	22		1	Axle Spacer
18		1	5/32 x 3/4 Spring Pin				
ns = not shown				SS = Stainless Steel			

Copyright © 2021 Douglas Dynamics, LLC. All rights reserved. This material may not be reproduced or copied, in whole or in part, in any printed, mechanical, electronic, film or other distribution and storage media, without the written consent of Western Products. Authorization to photocopy items for internal or personal use by Western Products outlets or spreader owner is granted.

Western Products reserves the right under its product improvement policy to change construction or design details and furnish equipment when so altered without reference to illustrations or specifications used. Western Products or the vehicle manufacturer may require or recommend optional equipment for spreaders. Do not exceed vehicle ratings with a spreader. Western Products offers a limited warranty for all spreaders and accessories. See separately printed page for this important information. The following are registered (®) or unregistered (™) trademarks of Douglas Dynamics, LLC: WESTERN®.

Printed in U.S.A.